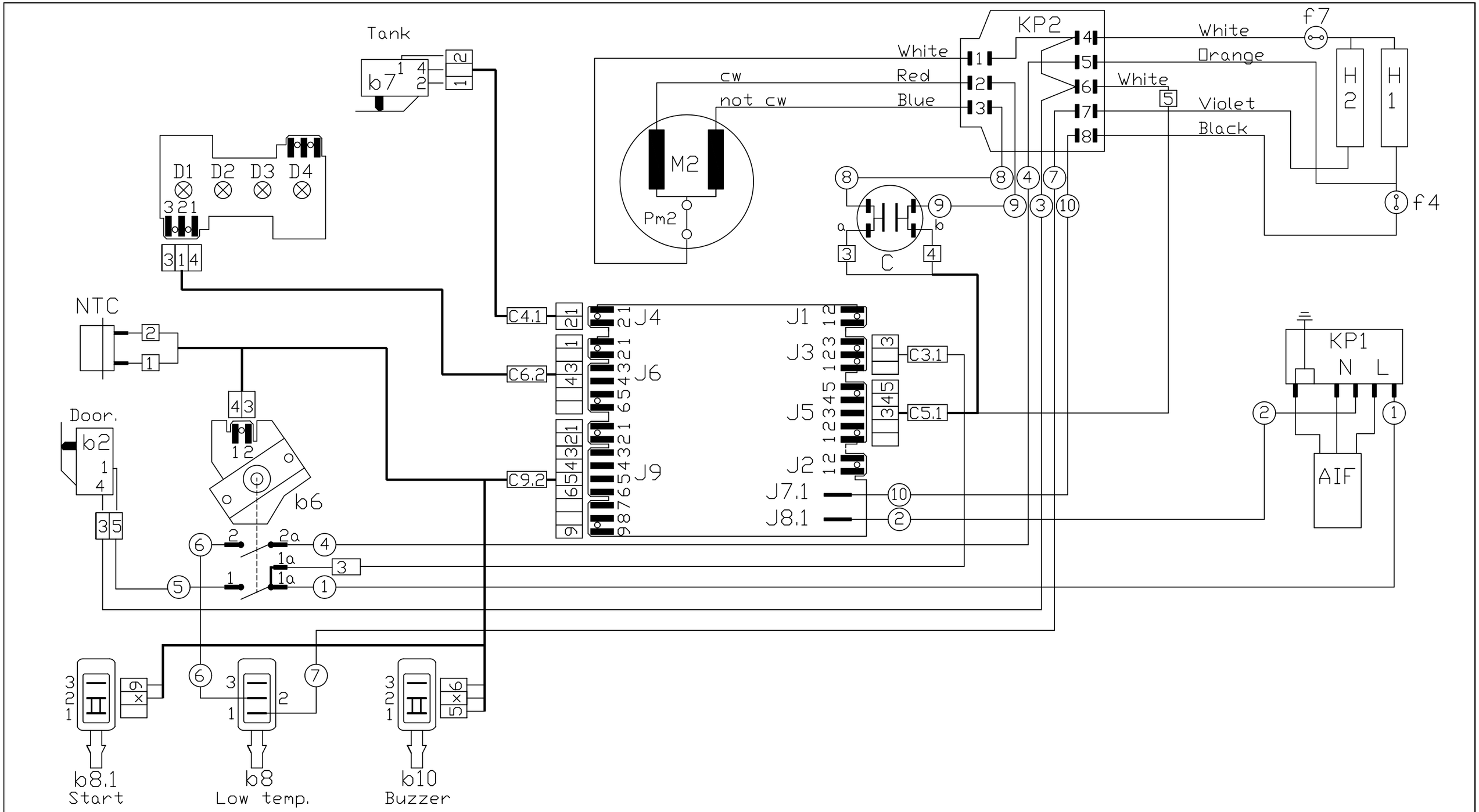

								9	Red	1506602-01
					5	White		8	Blue	1506601-01
				C5.1	4	Orange	1506323-00	7	Violet	1506600-00
3+5	3	Grey	1506598-02		3	Blue		6	Black	1506599-01
	5	Blue		C6.2		Orange	1506346-00	4	Orange	1506597-00
C3.1		White	1506324-00	C9.2		Orange	1506319-00	2	Blue	1506596-01
C4.1		Orange	1506320-00	10		Black	1506603-00	1	Brown	1506595-01
Term	Colour		Cable no.	Term	Colour		Cable no.	Term	Colour	Cable no.

El. circuit diagram 1506573

Harness

150 65 72