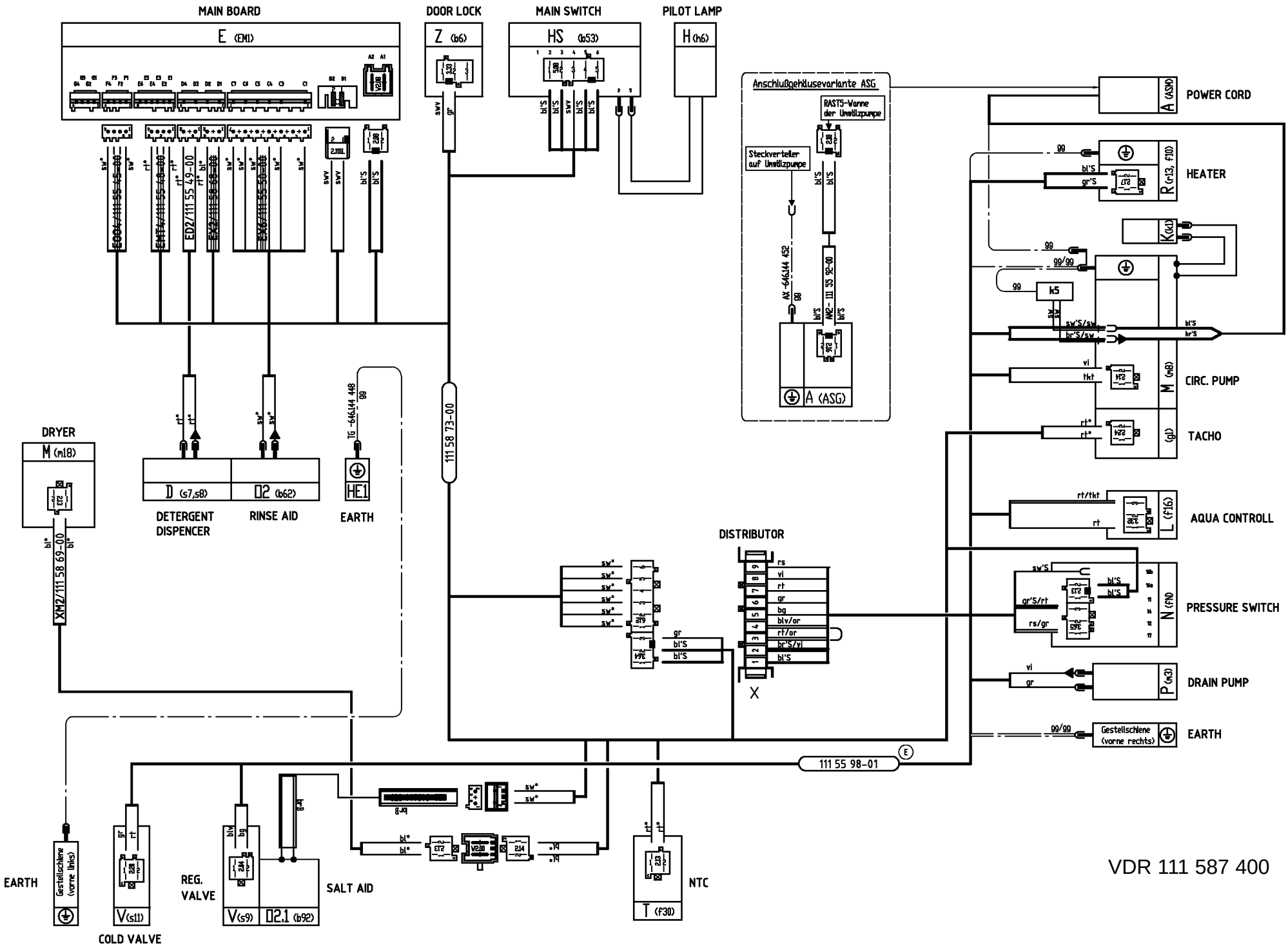
MAIN BOARD
E (EM1)
DOOR LOCK
Z (b6)
MAIN SWITCH
HS (b53)
PILOT LAMP
H (h6)
Anschlußgehäusevariante ASG
RAST5-Ventil der Umwälzpumpe
Steckverteiler auf Umwälzpumpe
A (ASG)
POWER CORD
A (ASM)
HEATER
R (r13, f10)
CIRC. PUMP
M (m8)
TACHO
(gl)
AQUA CONTROLL
L (f16)
PRESSURE SWITCH
N (fN)
DRAIN PUMP
P (m3)
EARTH
Gestellschiene (vorne rechts)
DRYER
M (m18)
D (s7,s8)
DETERGENT DISPENSER
D2 (b62)
RINSE AID
HE1
EARTH
111 58 73-00
DISTRIBUTOR
X
111 55 98-01
EARTH
Gestellschiene (vorne links)
V(s11)
COLD VALVE
REG. VALVE
V(s9)
D2.1 (b92)
SALT AID
T (f30)
NTC
VDR 111 587 400