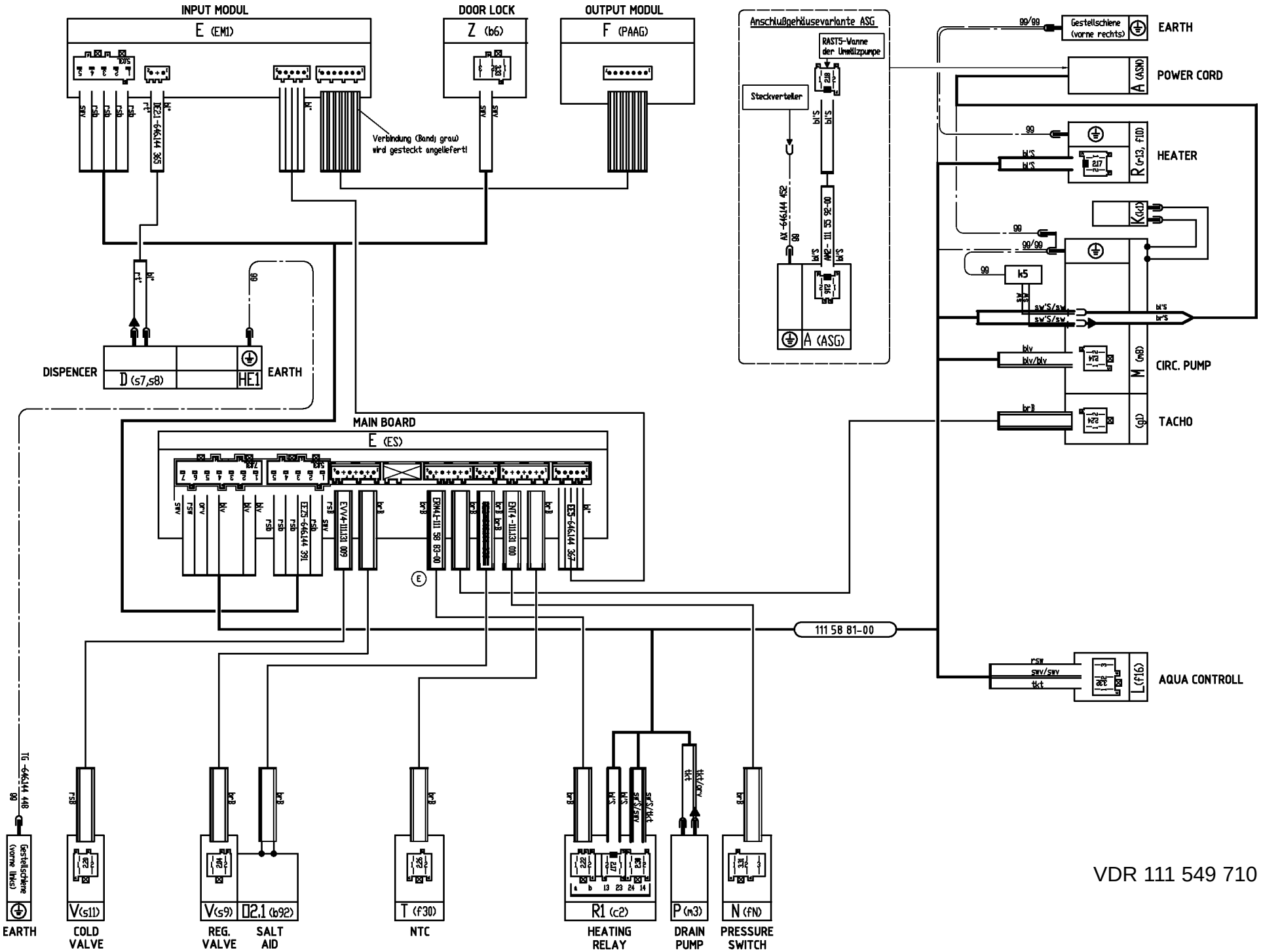
INPUT MODUL
E (EM1)
DOOR LOCK
Z (b6)
OUTPUT MODUL
F (PAAG)
Verbindung (Band) grau wird gesteckt angeliefert!
Anschlußgehäusevariante ASG
RAST5-Wanne der Umwälzpumpe
Steckverteiler
A (ASG)
EARTH
Gestellschiene (vorne rechts)
POWER CORD
A (ASN)
HEATER
R (r13, f10)
K (k1)
k5
CIRC. PUMP
M (m8)
TACHO
(g1)
AQUA CONTROLL
L (f16)
DISPENSER
D (s7,s8)
HE1
MAIN BOARD
E (ES)
111 58 81-00
Gestellschiene (vorne links)
EARTH
V (s11)
COLD VALVE
V (s9)
REG. VALVE
D2.1 (b92)
SALT AID
T (f30)
NTC
R1 (c2)
HEATING RELAY
P (m3)
DRAIN PUMP
N (fN)
PRESSURE SWITCH
VDR 111 549 710