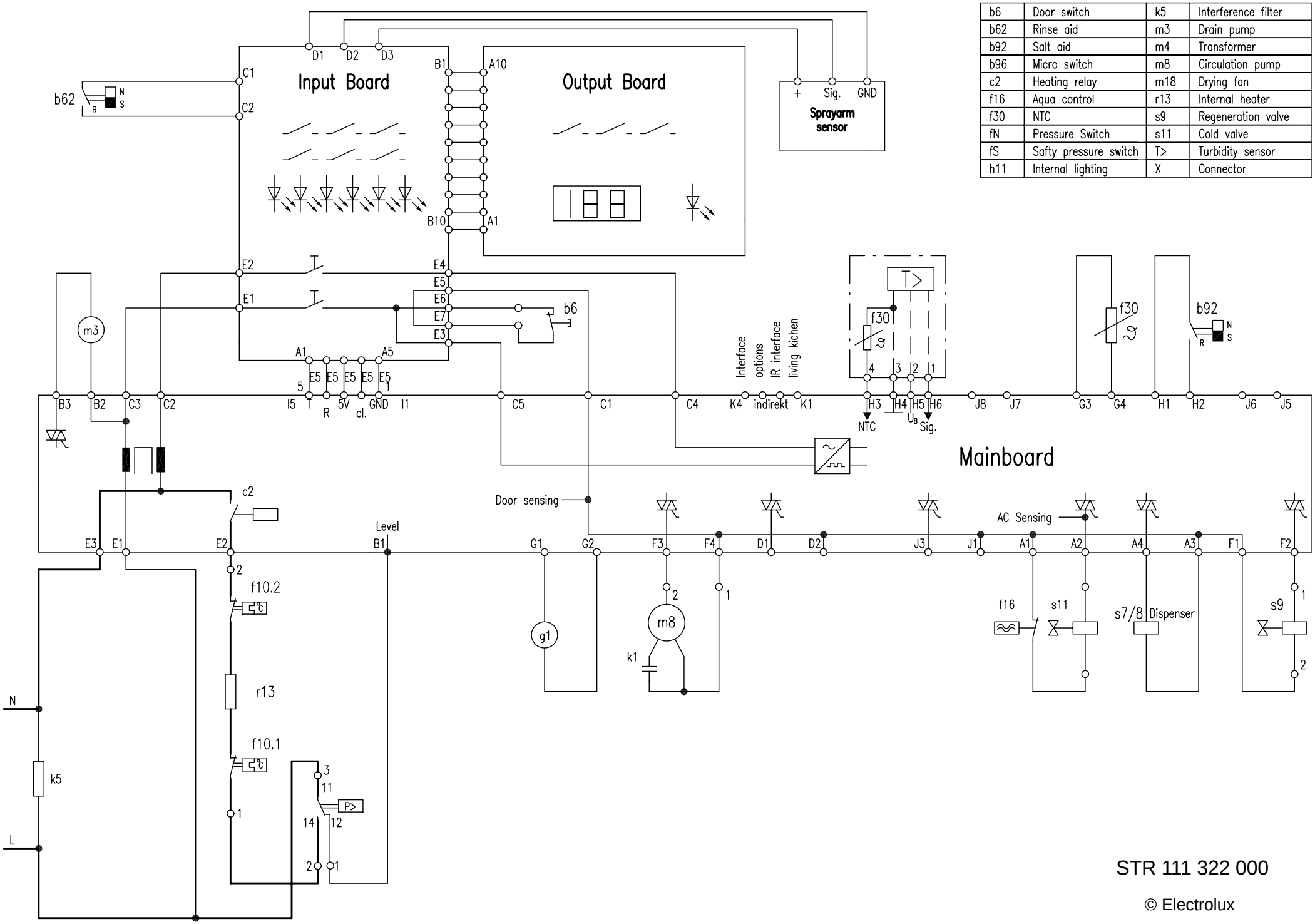

b6	Door switch	k5	Interference filter
b62	Rinse aid	m3	Drain pump
b92	Salt aid	m4	Transformer
b96	Micro switch	m8	Circulation pump
c2	Heating relay	m18	Drying fan
f16	Aqua control	r13	Internal heater
f30	NTC	s9	Regeneration valve
fN	Pressure Switch	s11	Cold valve
fS	Safty pressure switch	T>	Turbidity sensor
h11	Internal lighting	X	Connector

STR 111 322 000

© Electrolux