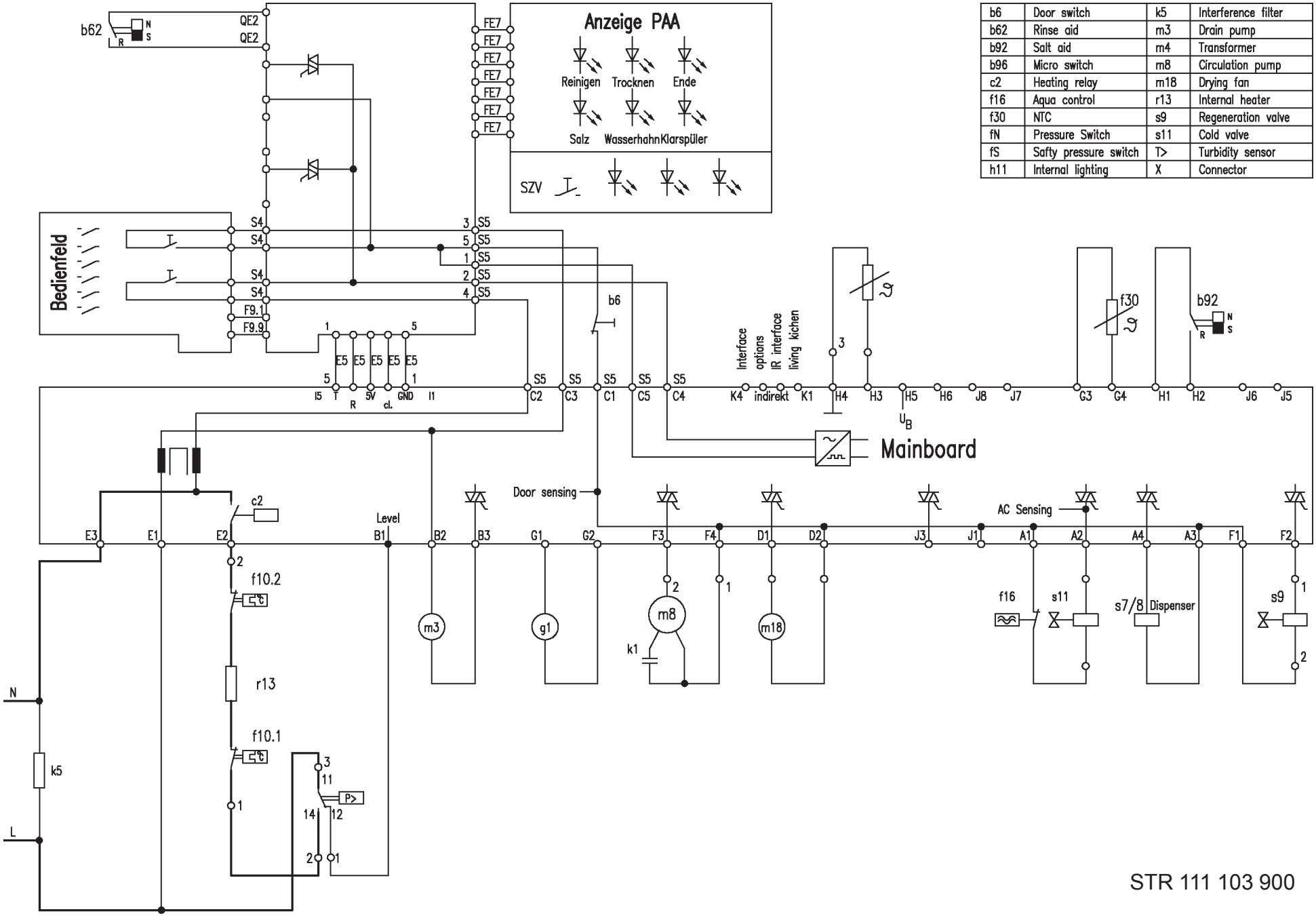


| | | | |
|---|---|---|---|
| b6 | Door switch | k5 | Interference filter |
| b62 | Rinse aid | m3 | Drain pump |
| b92 | Salt aid | m4 | Transformer |
| b96 | Micro switch | m8 | Circulation pump |
| c2 | Heating relay | m18 | Drying fan |
| f16 | Aqua control | r13 | Internal heater |
| f30 | NTC | s9 | Regeneration valve |
| fN | Pressure Switch | s11 | Cold valve |
| fS | Safty pressure switch | T> | Turbidity sensor |
| h11 | Internal lighting | X | Connector |

STR 111 103 900