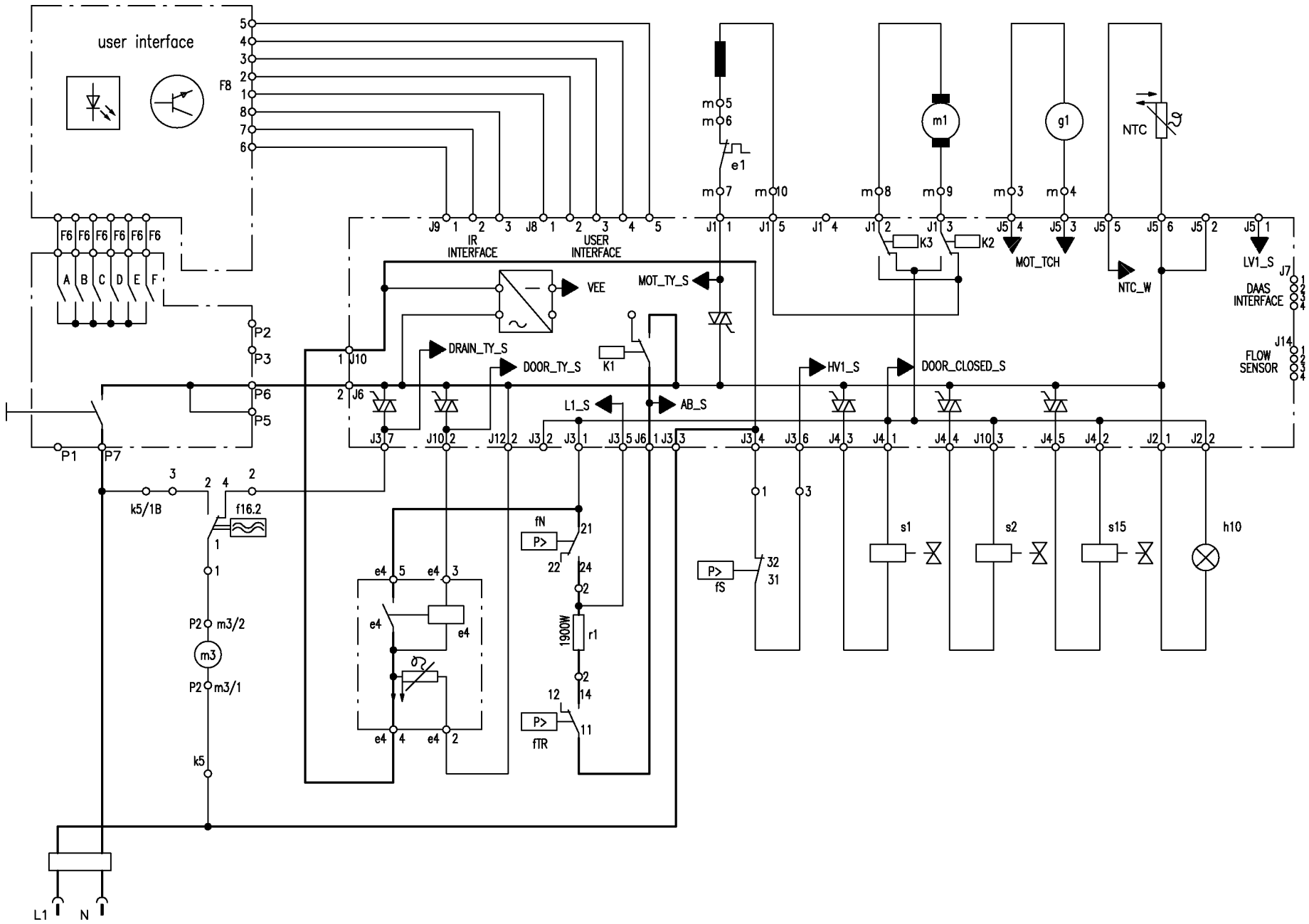
user interface
F8
F6
A
B
C
D
E
F
P1
P2
P3
P5
P6
P7
J9
IR INTERFACE
J8
USER INTERFACE
J1
J10
J6
J3
J12
J4
J2
J5
J7
J14
DAAS INTERFACE
FLOW SENSOR
VEE
MOT_TY_S
DRAIN_TY_S
DOOR_TY_S
K1
L1_S
AB_S
HV1_S
DOOR_CLOSED_S
K3
K2
MOT_TCH
NTC_W
LV1_S
NTC
m1
g1
e1
k5/1B
f16.2
m3/2
m3
m3/1
k5
fN
fS
fTR
1900W
r1
s1
s2
s15
h10
L1
N