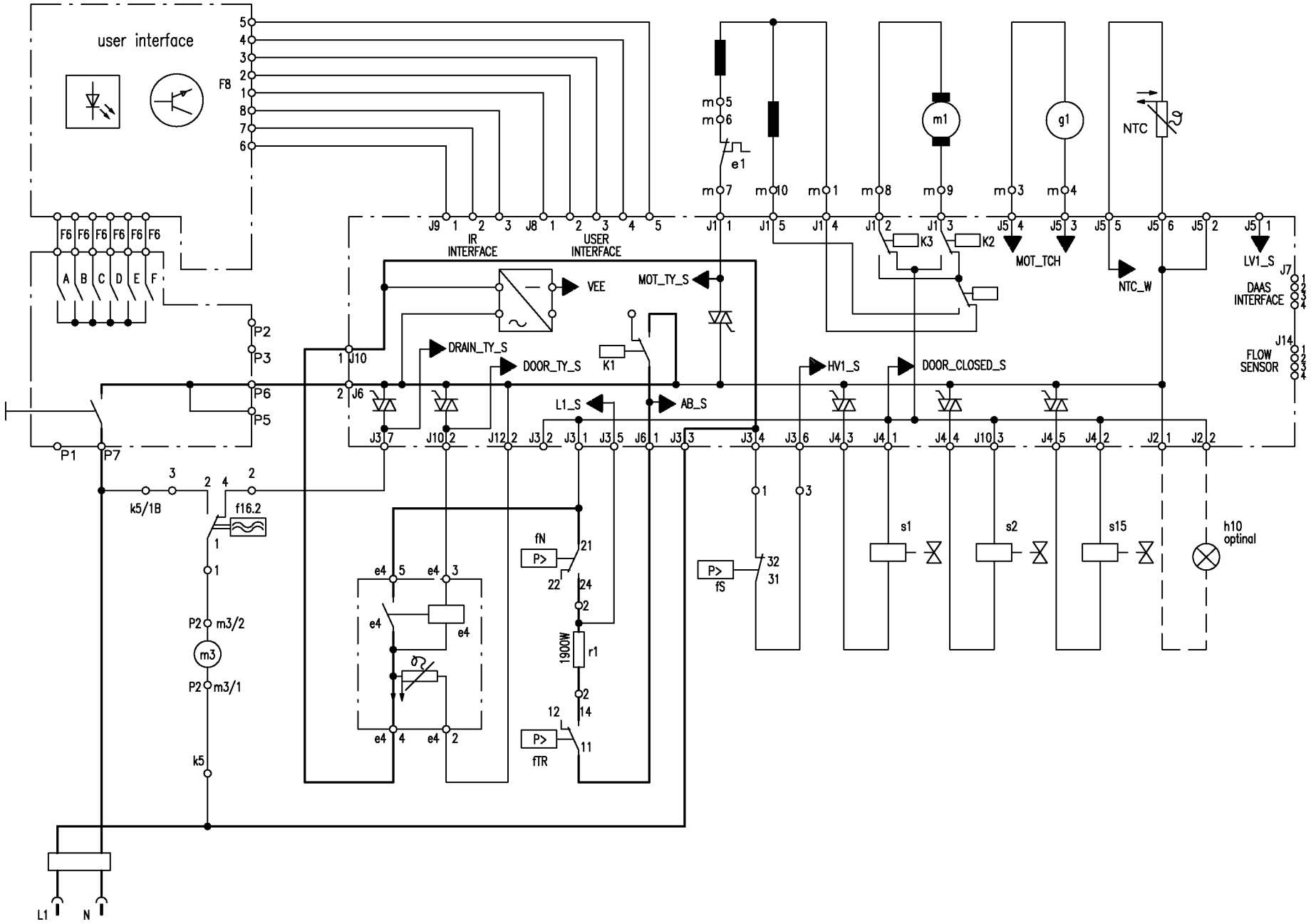
user interface
F8
F6
A
B
C
D
E
F
P1
P2
P3
P5
P6
P7
J9
IR INTERFACE
J8
USER INTERFACE
J1
J5
J2
J10
J6
J3
J12
J4
J14
J7
J11
J13
J15
J16
J17
J18
J19
J20
J21
J22
J23
J24
J25
J26
J27
J28
J29
J30
J31
J32
J33
J34
J35
J36
J37
J38
J39
J40
J41
J42
J43
J44
J45
J46
J47
J48
J49
J50
J51
J52
J53
J54