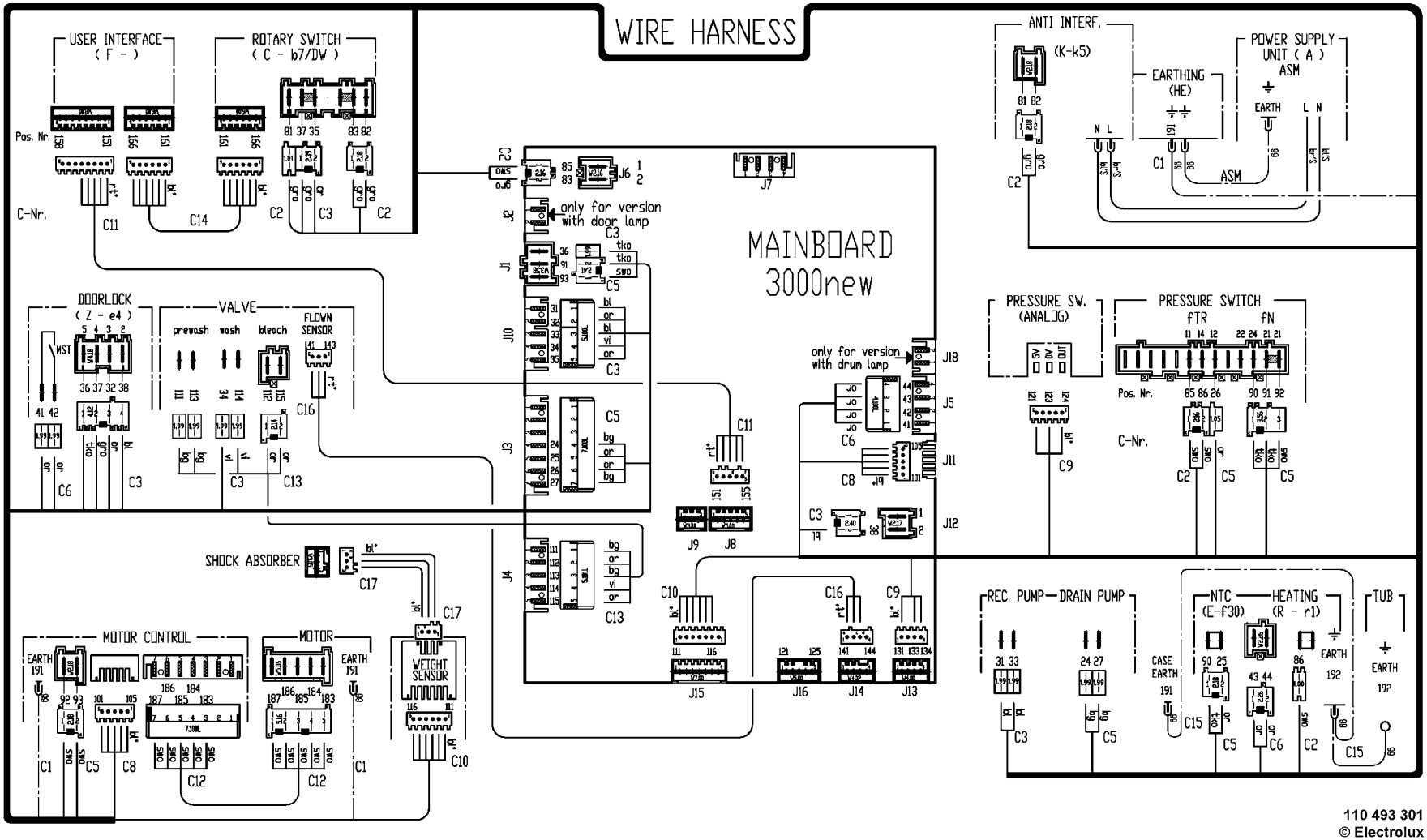

110 493 301
© Electrolux

single connections

C-Nr.	Title	C-Nr.	Title	C-Nr.	Title
C1	HE1MMC	C8	E5M Rast 2.5	C11	F8E5
C2	N2RECK 10	C9	E4F1Rast 2.5	C12	ME7M5
C3	E5ZCVP	C10	E7G Rast 2.5	C13	E5V
C4				C14	F6C
C5	E7NRPM			C15	EARTH
C6	E4NZ			C16	E4V
C7				C17	E3SA Rast 2.5